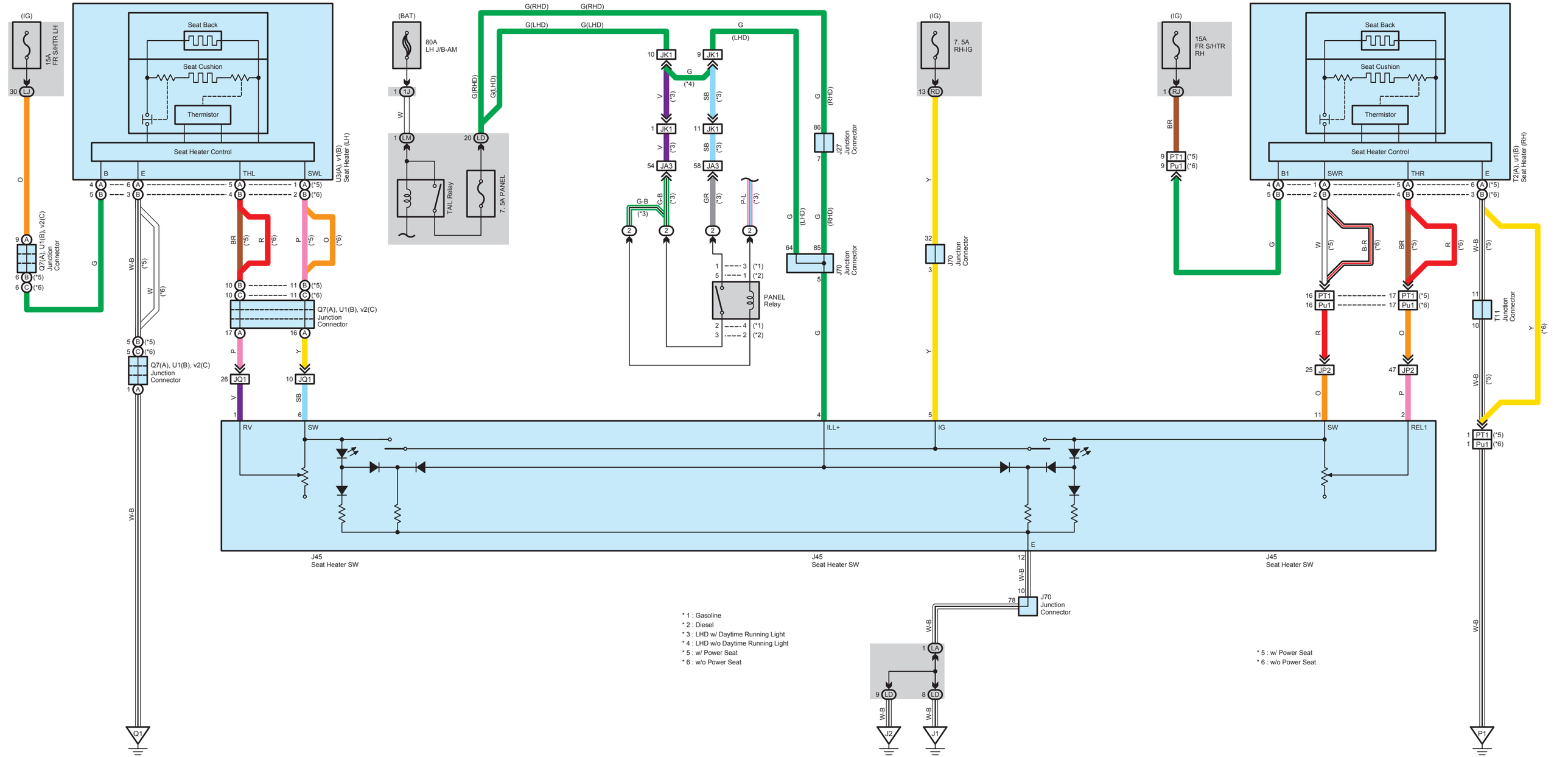
(IG)
15A
FR S/HTR LH
30 LJ
O
9 A
Q7(A), U1(B), v2(C)
Junction
Connector
6 B (*5)
6 C (*6)
G
Seat Back
Seat Cushion
Thermistor
Seat Heater Control
B
E
THL
SWL
U3(A), v1(B)
Seat Heater (LH)
4 A
5 B
6 A
3 B
5 A
4 B
1 A (*5)
2 B (*6)
W-B
(*5)
W
(*6)
BR
(*5)
R
(*6)
P
(*5)
O
(*6)
10 B
10 C
11 B (*5)
11 C (*6)
Q7(A), U1(B), v2(C)
Junction
Connector
17 A
16 A
P
Y
5 B (*5)
5 C (*6)
Q7(A), U1(B), v2(C)
Junction
Connector
1 A
26 JQ1
10 JQ1
V
SB
W-B
Q1
(BAT)
80A
LH J/B-AM
1 1J
W
1 LM
20 LD
TAIL Relay
7. 5A PANEL
G(RHD)
G(LHD)
G(RHD)
G(LHD)
10 JK1
9 JK1
G
(*4)
V
(*3)
SB
(*3)
1 JK1
11 JK1
V
(*3)
SB
(*3)
54 JA3
58 JA3
G-B
(*3)
G-B
(*3)
GR
(*3)
P-L
(*3)
2
2
2
2
1 3 (*1)
5 1 (*2)
PANEL
Relay
2 4 (*1)
3 2 (*2)
G
(LHD)
G
(RHD)
86
J27
Junction
Connector
7
G
(LHD)
G
(RHD)
64
85
J70
Junction
Connector
5
G
4
ILL+
(IG)
7. 5A
RH-IG
13 RD
Y
32
J70
Junction
Connector
3
Y
5
IG
(IG)
15A
FR S/HTR
RH
1 RJ
BR
9 PT1 (*5)
9 Pu1 (*6)
G
Seat Back
Seat Cushion
Thermistor
Seat Heater Control
B1
SWR
THR
E
T2(A), u1(B)
Seat Heater (RH)
4 A
5 B
1 A
2 B
5 A
4 B
6 A (*5)
3 B (*6)
W
(*5)
B-R
(*6)
BR
(*5)
R
(*6)
W-B
(*5)
16 PT1
16 Pu1
17 PT1 (*5)
17 Pu1 (*6)
11
T11
Junction
Connector
10
R
O
Y
(*6)
25 JP2
47 JP2
O
P
W-B
(*5)
11
2
SW
REL1
1 PT1 (*5)
1 Pu1 (*6)
RV
SW
J45
Seat Heater SW
J45
Seat Heater SW
J45
Seat Heater SW
E
12
W-B
10
78
J70
Junction
Connector
W-B
1 LA
9 LD
8 LD
W-B
W-B
J2
J1
W-B
P1
* 1 : Gasoline
* 2 : Diesel
* 3 : LHD w/ Daytime Running Light
* 4 : LHD w/o Daytime Running Light
* 5 : w/ Power Seat
* 6 : w/o Power Seat
* 5 : w/ Power Seat
* 6 : w/o Power Seat